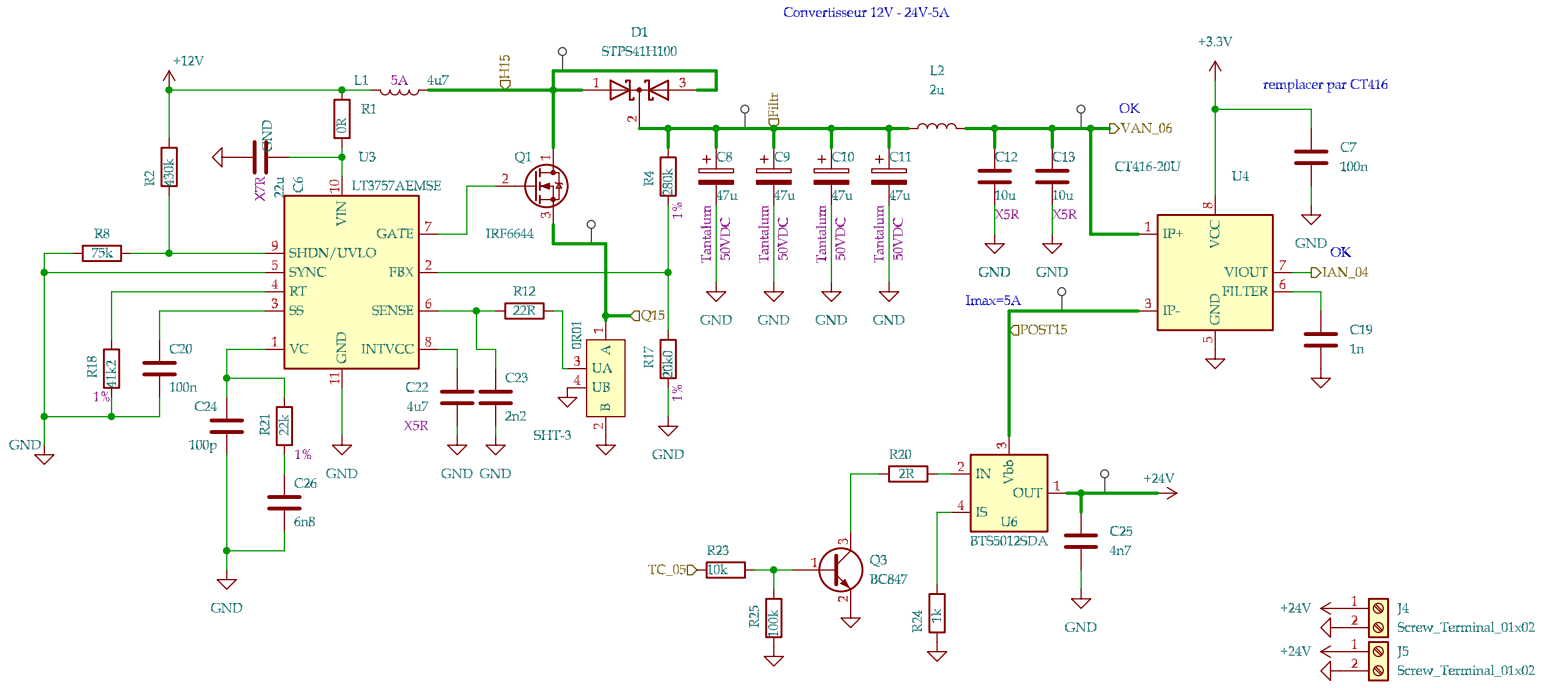

4.0 en Test

ECOPHOT - Astrophot

Sheet: /Filtre EMI/Alim 12V/Alimentation 24V/

File: Boost_24v.kicad_sch

Title: Alimentation Boost 24V

Size: A4	Date: 2025-05-11	**Rev: 4.1**
KiCad E.D.A. 9.0.6		Id: 7/7